TECHNICAL DATASHEET

BF 500

CONTACT US :

1 Grande rue
54540 MONTIGNY
Tel : +33 (0)3 83 42 15 79

WWW.PLAISANCE-EQUIPEMENTS.COM

PLAISANCE EQUIPEMENTS
1 Grande rue
54540 MONTIGNY
Tél : 03 83 42 15 79

BF 500

GENERAL INFORMATION			
Rotor width	1,6 m	1,8 m	2 m
Rotor diameter	490 mm		
Use	Wood mulching		
Tools	Double carbide tips		
Tools position on the rotor	Fixed - Helical and V positions.		
Mulcher power accepted	70 to 120 Hp		
Mechanical drive	5 belts (one side only)		
Curtain of chains	Antiprojection simple curtain of chains		
Hydraulic rake	Optional		
Protection door	Hydraulic with one heavy duty cylinder.		
Chassis	Steel		
Ski	HARDOX 450® soles		
Protections	Anti-wire cut in mass, bolted.		
Gearbox	130 Hp		
Hitch pins	Category 2 or 3 depending the modele		

Tools

Double carb tip

OF6

WEIGHT AND DIMENSIONS (Kg and mm)

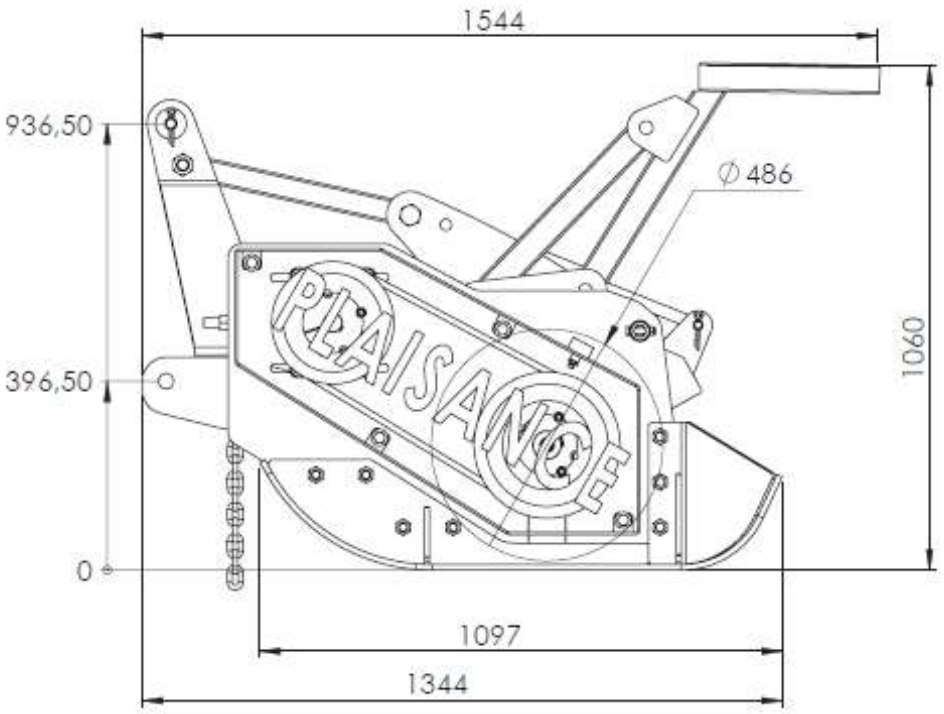

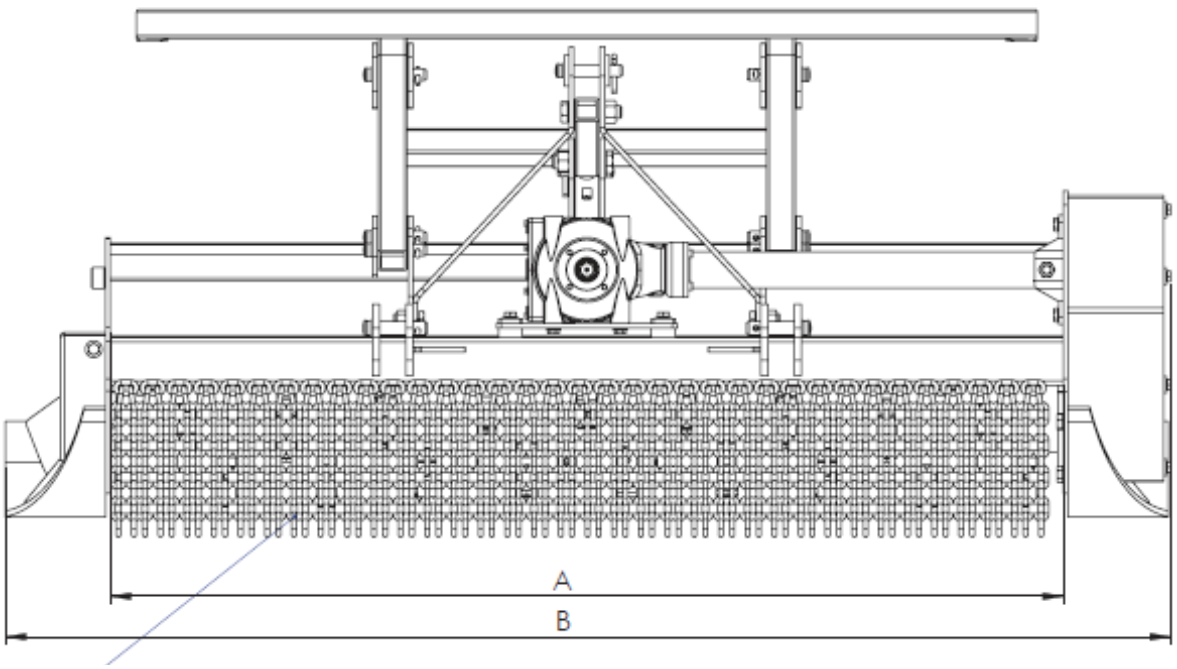

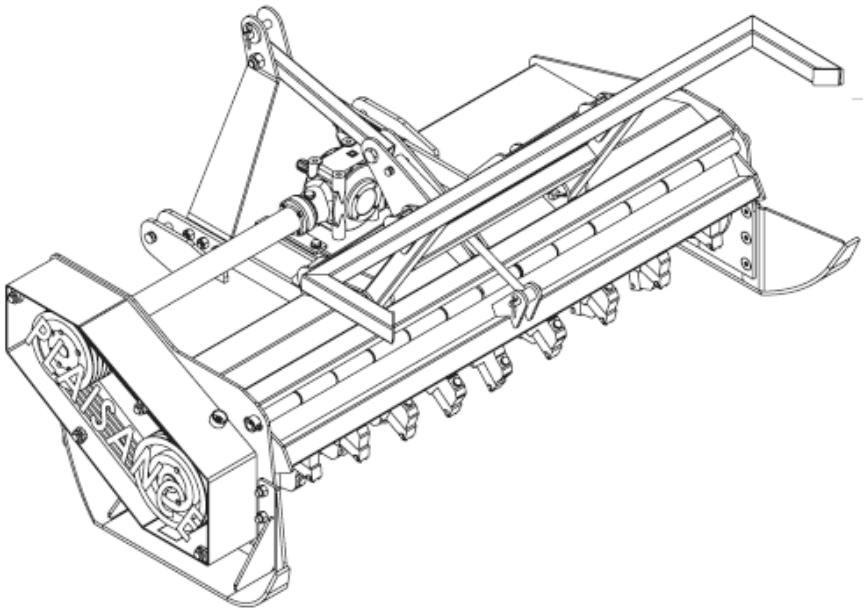

Working width (A)	Overall width (B)	Mass
1600 mm	2045 mm	950 Kg
1800 mm	2245 mm	1020 Kg
2000 mm	2445 mm	1090 Kg

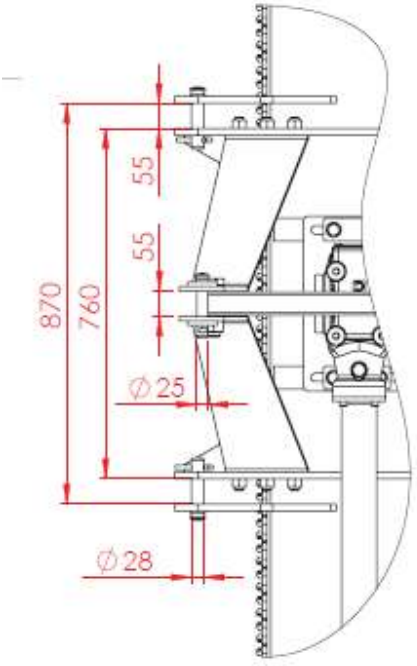

Illustrations and dimensions are for indication only.
PLAISANCE EQUIPEMENTS reserves the right to modify them without notice.
This plan is the property of PLAISANCE EQUIPEMENTS and may not be reproduced or communicated without permission.
All rights reserved.